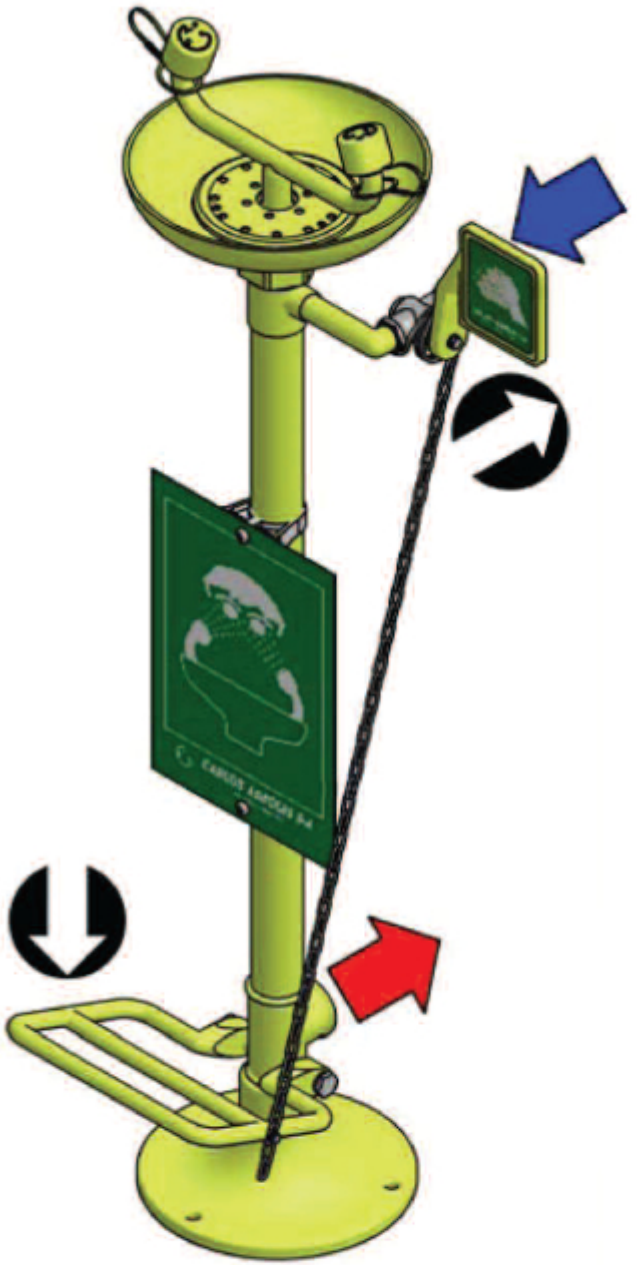

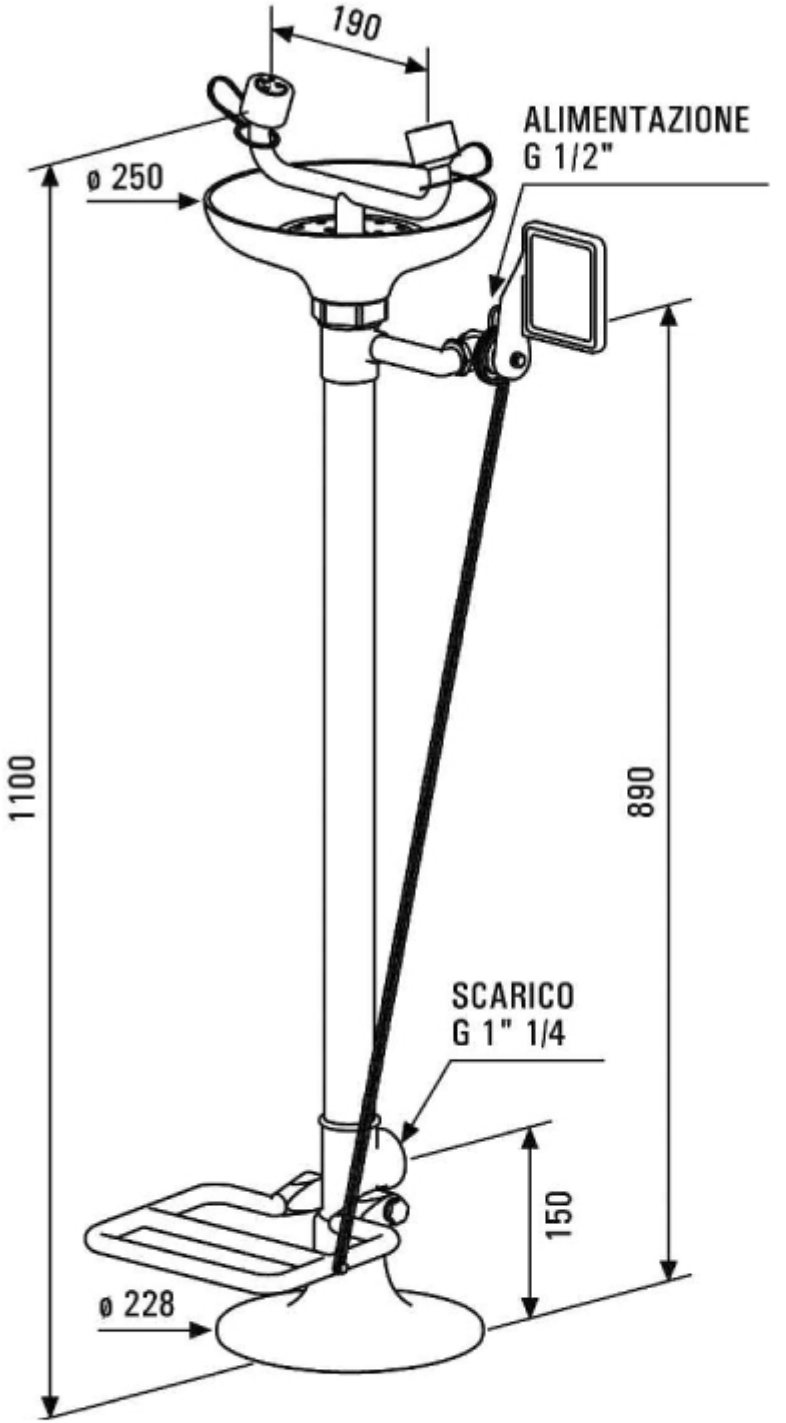

*Var. cod. 050.2221/2220.9/2711: Ø 260mm

cod. 050.2220-050.2221-050.2220.9-050.2711-050.2240